ITEM NO.	PART NO.	DESCRIPTION	QTY.
1	302417-SL	SHELL LAYOUT FOR 24" TANK	1
2	H32030	.149 MIN. 24" O.D. 2:1 ELLIP. PLAIN HEAD	2
3	F10250	1/2"-NPT FLAT FLANGE	1
4	F10360	1 1/4"-NPT FLAT FLANGE	1
5	F31826	1/4"-NPT FLAT FLANGE	1
6	F12520	1 1/4"-NPT RADIAL FLANGE	2
7	F12440	2"-NPT RADIAL FLANGE	2
8	A99373	12GA BASERING ASY	1
9	A20910	ASME DATA PLATE	1

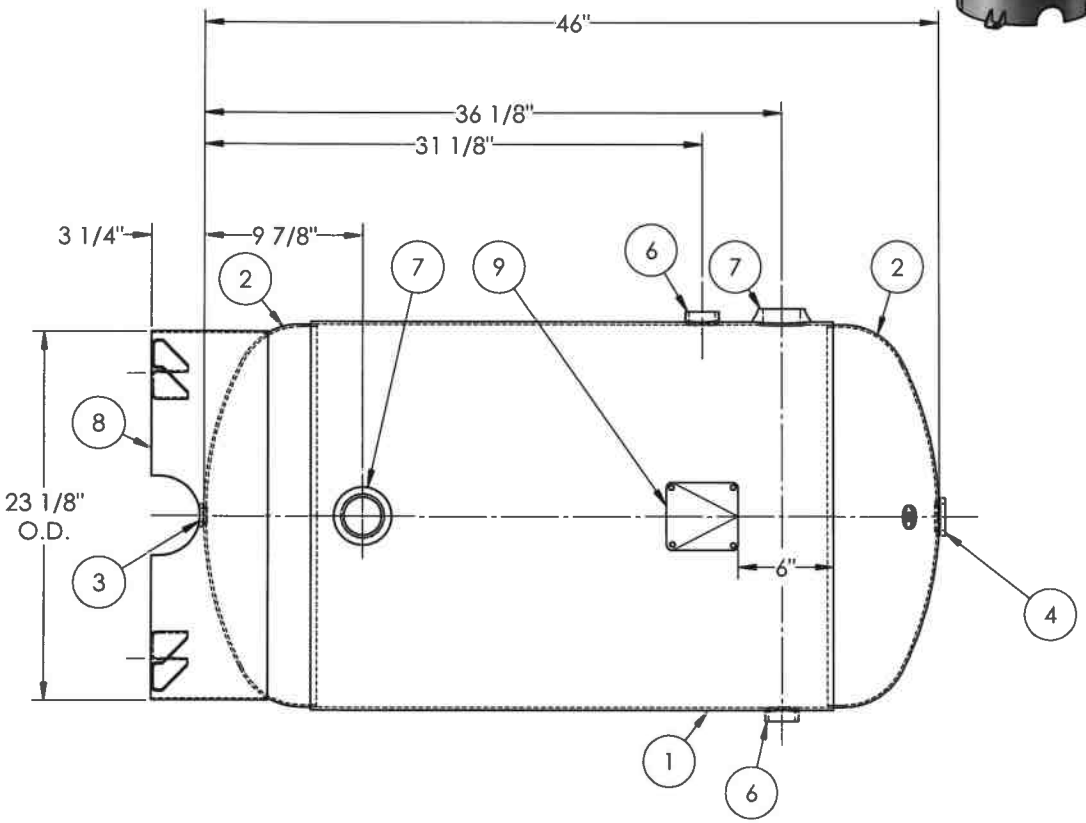

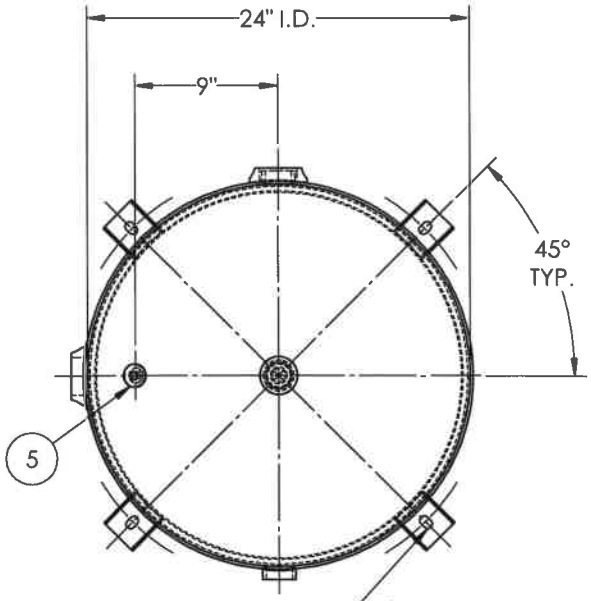

NOTES:

RELEASED FOR PRODUCTION
Q.C. _____ DATE _____

SPECIFICATIONS

I.D. 24 LGTH. 46 MAWP 200 PSI @ 400°F
WT. 222 LBS.
S.A. 26.3 SQ.FT.
GAL. 80 CU.FT.10.7 CRN: E7400.2C W
CODE: ASME Section VIII, Div.1, LATEST EDITION EXMT UG-20(f) CORR ALW 0 SH 0 HD
STD. TOLERANCES: M-2461 (UNLESS OTHERWISE NOTED) WELD DETAILS: M-1932

REVISIONS

REV.	BY	DESCRIPTION	DATE	APP.
C	KG			DS
D	KG			DS
E	LG			DS

80ARV200

VERTICAL AIR RECEIVER

DRAWN BY:	DATE:
APPR. BY:	DATE:
SCALE: NONE	DRWG NO. **302417**